Street 1 according to EN 13201:2015

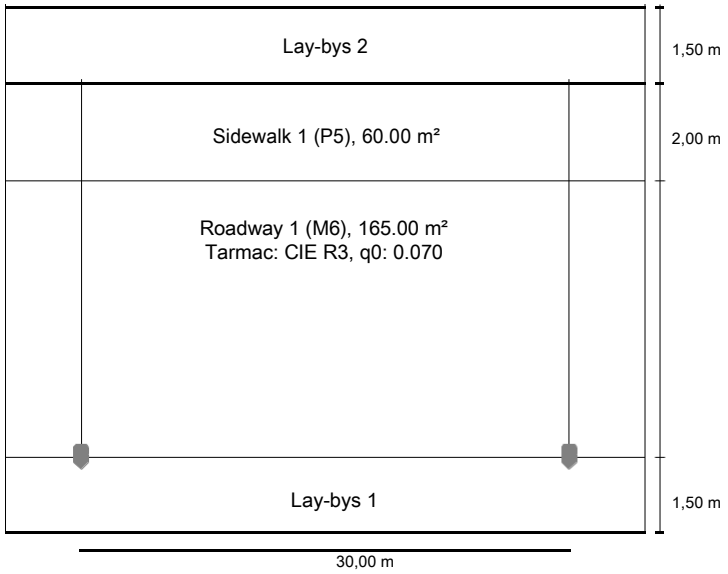

Oprawa LED
LED ED 3100lm/740 O8 szary II kl.

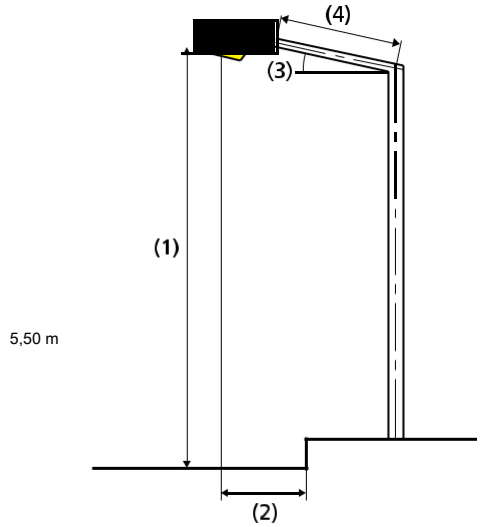

Lamp:	1xLED 4000K
Luminous flux (luminaire):	3101.66 lm
Luminous flux (lamp):	3100.00 lm
Operating Hours	
4000 h:	100.0 %, 28.0 W
W/km:	924.0
Arrangement:	single side bottom
Pole distance:	30.000 m
Boom inclination (3):	0.0°
Boom length (4):	0.000 m
Light centre height (1):	7.000 m
Light overhang (2):	0.000 m

Results for valuation fields

Maintenance factor: 0.80

Sidewalk 1 (P5)

Em [lx]	Emin [lx]
≥ 3.00	≥ 0.60
≤ 4.50	
✓ 4.07	✓ 2.17

Roadway 1 (M6)

Lm [cd/m²]	Uo	UI	TI [%]	EIR
≥ 0.30	≥ 0.35	≥ 0.40	≤ 20	≥ 0.30
✓ 0.50	✓ 0.56	✓ 0.80	✓ 10	✓ 0.65

Results for energy efficiency indicators

Power density indicator (Dp) 0.019 W/lxm²

Energy consumption density
Arrangement: LED ED 3100lm/740 O8 szary II kl. (112.0 kWh/yr) 0.5 kWh/m² yr

ULR:	0.00
ULOR:	0.00
Maximum luminous intensities	
at 70° and above	728 cd/klm *
at 80° and above	106 cd/klm *
at 90° and above	0.00 cd/klm *
Luminous intensity class:	G*2

Any direction forming the specified angle from the downward vertical, with the luminaire installed for use.

* Luminous intensity values in [cd/klm] for calculating luminous intensity class refer to the output flux of the luminaire, according EN 13201:2015.

Arrangement complies with glare index class D.6